F-SERIES WHEEL LOADERS
1021F I 1121F

CASE CONSTRUCTION

WORK FASTER, PRODUCE MORE

www.casece.com

EXPERTS FOR THE REAL WORLD
SINCE 1842

F-SERIES
WHEEL LOADERS

EXPERTS FOR THE REAL WORLD
SINCE 1842

1842 ***Case is founded.***

1869 ***The first Case portable steam engine - road construction is born!***

1958 ***The first Case 4-WD wheel loader, the W9, is introduced.***

1969 ***Case begins skid steer loader production.***

1998 ***Ride control on loader backhoes and skid steer loaders: another Case first. From 1998 Case Wheel Loaders run FPT engines, leaders in industrial engine technology.***

2001 ***The exclusive Cooling Cube in Case wheel loaders means clean engine and reliability.***

HERITAGE
A TRADITION OF INDUSTRY FIRSTS

2011 ***The first wheel loaders with SCR engine technology and Proshift transmission lead to faster cycles and fuel economy.***

2012 ***Case completes its Tier 4i (EU Stage IIIB) wheel loader range: once again, the first in the industry*.***

2015 ***Case wheel loaders achieve Tier 4 Final / EU Stage IV emissions standards*.***

**** Only in regulated countries***

F-SERIES
WHEEL LOADERS

HIGH RELIABILITY
Advanced technologies

The engine was developed and manufactured by our award winning sister company FPT Industrial, which produces over 500,000 engines per year and powers world record winners.

The in-house design leverages advanced technologies developed for commercial vehicles and agriculture, and introduces specific tailored solutions for off-road applications.

Our engine technology is so reliable that it is trusted by the French Sea Rescue service for their boats: what better guarantee could you wish for?

ENGINE
KEEP IT SIMPLE

HIGH EFFICIENCY

Best-in-class design

The second generation common rail engine Cursor delivers top performance in load response, max torque, power and fuel economy

- The Cursor 9 common rail engine ensures better engine control at all rpm.The multiple injection technology ensures optimum combustion control, while the 1600 bar injection delivers best-in-class torque performance.
- The combustion is optimized for maximum efficiency, at high temperatures using 100% fresh, cool air, as the air intake is separated from the exhaust.
- The turbocharged engine with an Air-to-Air intercooler relies on a 3-step injection technology to maximize responsiveness and fuel efficiency with reduced engine noise and vibrations

F-SERIES
WHEEL LOADERS

HIGH RELIABILITY

Case heavy-duty axles

The heavy-duty axles are tougher, bigger and easier to service thanks to the 3-piece housing design. Wet multiple disc brakes, made of resistant sintered bronze, are located in each wheel hub. Our heavy-duty axles are engineered to support L5 or solid tyres for very abrasive environments. Metal face seals positioned between axle and hub are resistant to water and fine debris at low temperatures.

The Case heavy-duty axles deliver added value resulting from:

- 20-30% lower tyre wear because of no slippage between the wheels;
- reduced fuel consumption because there is no friction in the differential;
- reduced downtime for maintenance because of fewer moving components with open differentials.

AXLES AND DIFFERENTIALS
WHEN EFFICIENCY MEETS PRODUCTIVITY

COST SAVINGS

100% auto lock differential

With open differentials, no friction is applied to reduce wheel slip. As a result, there is less tyre wear and lower energy losses.With the 100% Auto-lock, 100% of the available torque is transmitted to the wheels to provide maximum tractive effort.

Taking a curve on solid ground

With limited slip differential:

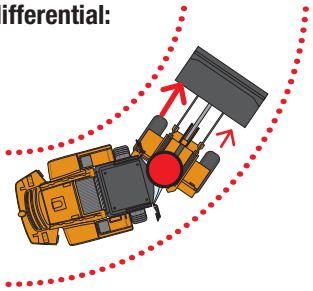

Automatic slip limited engagement
- Internal losses and wind up
- Increased tyre wear

With 100% diff lock (optional):

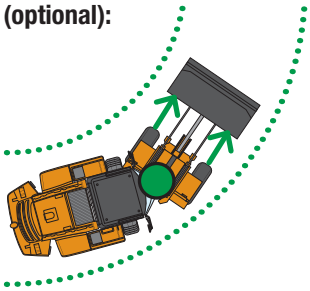

No engagement (open diff)
- No energy loss
- Less tyre wear

Loading on soft ground

With limited slip differential:

- 70% tractive effort transmitted to the wheels
- automatic engagement

With 100% diff lock (optional):

- 100% tractive effort transmitted to the wheels
- automatic or manual engagement

F-SERIES
WHEEL LOADERS

HIGH RELIABILITY
Case cooling cube

The unique design of the CASE cooling cube, with five radiators mounted to form a cube instead of overlapping, ensures a constant flow of fresh and clean air from the sides and from the top to maintain constant fluid temperatures.

The cube structure provides easy access to radiators for a more effective cleaning and improved serviceability: additional cleaning can also be easily done manually, with separate access to each radiator.

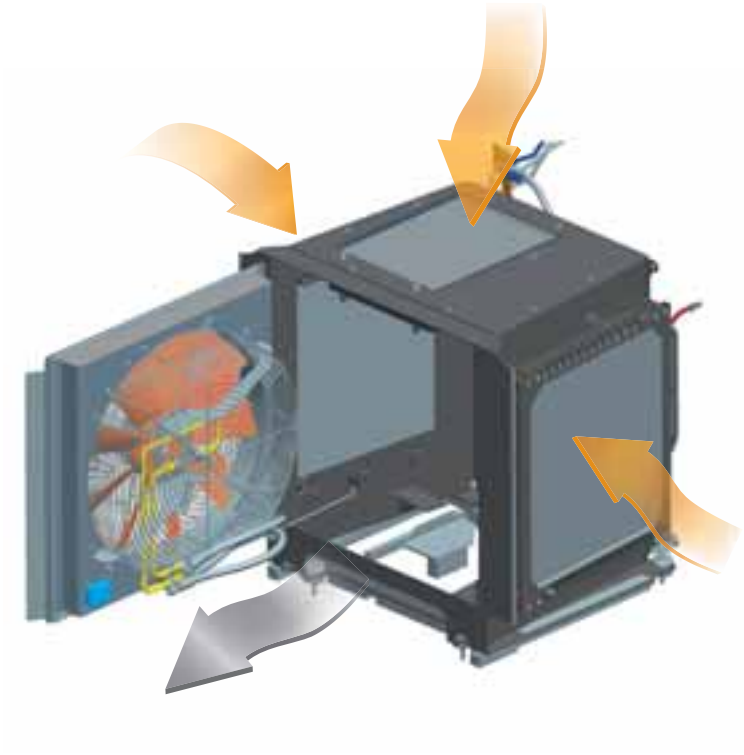

HIGH RELIABILITY
Air filter dust ejector

All 1021F and 1121F wheel loaders are fitted with an air filter dust ejector: the low pressure in the exhaust is used as a vacuum cleaner to remove the dust stuck in the air intake filter. This system is designed to improve your machine performance in terms of reliability, especially in dusty environments.

CASE COOLING CUBE
ENGINE BREATHES DUST-FREE AIR

CASE COOLING CUBE DETAILS

1. Variable speed reversible fan
2. Hydraulic oil cooler
3. Transmission oil cooler
4. Turbo air intercooler
5. A/C condensator
6. Diesel radiator
7. Front and rear axles cooler
8. Engine radiator

LESS MAINTENANCE

Case cooling cube

- In dusty environments like sand pits or quarries the cleaning of the radiators can be very time consuming: this is not the case with the cooling cube.
- The constant temperature of the fluid maximises its cooling performance and protects the axles, resulting in greater reliability. This is further enhanced by the easy maintenance and longer service intervals.

F-SERIES
WHEEL LOADERS

MORE PRODUCTIVITY

Linkage and bucket design

- The combined action of the higher engine power, the linkage design and the short bottom bucket provides in a massive 244 kN breakout force in the pile
- The flat bottom shape of the bucket makes grading jobs easier and increases material retention.
- The new loader design with high roll back increases the bucket capacity by about 10%. It also significantly improves material retention in carry phases.
- The superior dump angle allows for easy bucket shaking even with sticky material.

The bucket fills faster with the greater thrust and breakout force. The greater bucket capacity and better material retention mean a more effective use of your resources!

OPTIMISED FRONT LOADER
SPEED AND PRODUCTIVITY

FAST CYCLES

More productivity

With the 1021F and 1121F we have taken a big step forward in shortening your cycle times, which result in more tons per hour with less fuel:

- You accelerate from standing start and lift the bucket in just 11 meters
- Best-in-class breakout force allows you to improve cycle times
- The hydraulic system allows you to lift and tilt simultaneously without reducing lift speed

MAIN REASONS
TO CHOOSE THE F-SERIES

FAST CYCLES

- Best-in-class breakout force
- Simultaneous lift and tilt at constant lift speed
- Faster bucket lifting allows for faster truck loading

HIGH EFFICIENCY

The second generation common rail engine Cursor delivers top performance in load response, max torque, power and fuel economy

HIGH RELIABILITY

- Heavy-duty axles
- 100% differential lock
- Unique cooling package

COMFORTABLE AND SAFE CAB

- ROPS/FOPS level 2
- Pressurised cab
- Wider glazed area for unbeatable visibility
- Spacious cab

SUPERIOR COOLING EFFICIENCY

- Seven radiators form a cube instead of overlapping.
- Designed to maintain constant fluid temperatures.

SAFE AND EASY MAINTENANCE

Grouped drains rationalise maintenance operations.

COMFORTABLE AND SAFE CAB

Ample and well protected cab

- Our reinforced cab guarantees protection against roll over (ROPS) and falling objects (FOPS).
- Our cab is also certified P2 level according to European Standards EN143, which means that 94% of airborne particles are filtered. When working in particularly tough conditions, additional pressurisation and particle filtration can be fitted.
- On Waste Handler models windshield guards provide protection from falling pieces of solid waste.
- The CASE Cab is 2.06 m^3 and 1.64 m wide: it is the widest cab in the industry
- The air suspended seat features a high back design and lumbar adjustment, a saving grace during long working days. It includes seat heaters that warm up cold winter mornings.

CAB
COMFORT RULES

HIGH VISIBILITY

Wide glazed surfaces and curved engine hood

You'll feel more confident and work faster with the great all-round visibility provided by the very low shape of the curved rear hood and the ample glazed surfaces.

COMFORTABLE AND SAFE CAB

Low engine vibrations

- The rear mounted engine is far from the cab, further enhancing operator comfort.
- Engine noise and vibrations are reduced by the 3-step injection: pre-, main- and post-injection.

SAFE AND EASY MAINTENANCE

Ground level serviceability

- One-piece electric hood
  The positioning of the engine at the rear and the easy-to-open electric hood provide fast access to the service points. Jumper cables are available as standard for jump starting the engine if the battery is low.

- Easy daily checks
  You can do a fast visual check of the fluids from ground level.

- Greater safety
  All the main service points and filters are easily accessible at ground level, so you can carry out your daily maintenance safely and efficiently.

MAINTENANCE
HAS NEVER BEEN SO EASY AND FAST

Fuel filter and engine oil service points are easily accessible from both sides while the others filters are behind the right stairs.

The air filter is easy to remove and the dust is aspirated and ejected in the exhaust

The layout of the components under the hood is optimised and results in easier maintenance.


1121F


CASE
CASE

TELEMATICS*
ANTICIPATION AND CONTROL

CASE® CONSTRUCTION | SiteWatch™

THE SCIENCE BIT

The Case SiteWatch telematics system uses a high-tech control unit mounted on each machine to collate information from that machine and from GPS satellites. This data is then sent wirelessly through the mobile communication networks to the Case Telematics Web Portal.

SiteWatch: centralised fleet control benefits at your fingertips

Measure your true asset availability and optimise it

- Eliminate the "phantom fleet": SiteWatch allows to identify spare units or under loaded machines on each site.
- Become able to reallocate units where they are more needed.
- Forward Maintenance Planning is easier since the actualised working hours are always available.
- Extend the benefits of SiteWatch to the rest of your fleet: SiteWatch can be installed on the units of other brands as well.

Challenge your Total Cost of Ownership!

- Being able to compare the fuel usage of different machine types will allow you choose the right equipment.
- Save on transport costs with planned and grouped maintenance tasks.
- Peace of mind, optimised uptime and lower repair costs: with preventive maintenance you can for example be alerted if the engine needs to be serviced and avoid a disruptive breakdown.
- Be able to compare your asset Return On Investment on different sites.
- Your equipment is used only during working hours. You can set up alerts so that you know if it is in use during the weekend or at night.
- Integrate with the programmed maintenance package, so that you can be sure every machine is at the right place at the right time.

More Safety, Lower Insurance Premium

- Keep thieves away: dissuade them from attacking your asset because it is geo-localised. SiteWatch is hidden so that thieves can't find it quickly.
- Your fleet is used only where you decide. You can define a virtual fence and receive an email when a machine exits that perimeter.

*** Check availability in your country**

SPECIFICATIONS

ENGINE

	1021F	1121F
FPT engine	Cursor 9	
Cylinders	6	
Displacement (l)	8,7	
Air intake	Turbocharger with air-to-air cooling. No EGR valve is used: Only fresh air is taken for combustion.	
Injection	Common Rail Multiple Injection.	
Emission level	Compliant with EU Stage II and US Tier 2.	
Max. power (kW/hp)	239 / 320	259 / 347
(@ rpm)	1800	1800
(SAE J1995 / ISO 14396)		
Max. torque (Nm)	1479	1604
(@ rpm)	1100	1100
(SAE J1349)		

TRANSMISSION

4-Speed Powershift
4x4 transmission with auto-shift system and Intelligent Clutch Cut Off (ICCO).

Forward 1 (km/h)	7	7
Forward 2 (km/h)	13	12
Forward 3 (km/h)	19	18
Forward 4 (km/h)	38	38
Reverse 1 (km/h)	7	7
Reverse 2 (km/h)	13	13
Reverse 3 (km/h)	27	26

AXLES AND DIFFERENTIAL

Rear axle total oscillation	24°
A-Choice	100% lock of the front differential. (Heavy duty axles)
B-Choice	Open center differentials. (Standard axles)

TYRES

Tyres	26.5R25

BRAKES

Service brake	Maintenance free, self-adjusting wet 4-wheel disc brakes.
Brake disc area (m^2/hub)	0.74
Parking brake	With the negative brake all four wheels are automatically stopped when the engine is stopped.
Disc brake area (cm^2)	82

HYDRAULICS

	1021F	1121F
Valves	Rexroth Closed-center, Load sensing hydraulic system. Main valve with 3 sections.	
Steering	The steering orbitrol hydraulically is actuated with priority valve.	
Automatic functions	Bucket Return-to-dig, Boom Return-to-travel, Boom Auto-lift.	
Control type	Pilot control with single joystick or two levers.	
Type of pump	Tandem Variable displacement pump.	
(l/min)	352	380
(@ rpm)	2000	2000

AUXILIARY HYDRAULIC CIRCUIT

Max flow (l/min)	260	260
Max pressure (bar)	224	224

SERVICE CAPACITIES

Fuel tank (l)	459	459
AdBlue tank (permanently heated by engine coolant) (l)	65	65
Cooling system (l)	57	57
Engine oil (l)	26	26
Hydraulic oil tank (l)	134	134
Total hydraulic system oil (l)	250	250
Front and Rear Axles (l)	68	68
Transmission oil (l)	45	45

CAB PROTECTION

Protection against falling objects (FOPS)	ISO EN3449
Protection against roll over (ROPS)	ISO EN13510

NOISE AND VIBRATION

In the cab - LpA (dB) (ISO6395/6396/3744)	71
Outside - LwA (dB) (ISO6395/6396/3744)	107
Vibrations	Operator 's seat meets the criteria of ISO 7096:2000. The vibrations transmitted do not exceed 0.5 m/s²

ELECTRICAL SYSTEM

24V. Batteries 2 x 12V.

Alternator (A)	65

F-SERIES
WHEEL LOADERS

1021F GENERAL DIMENSIONS

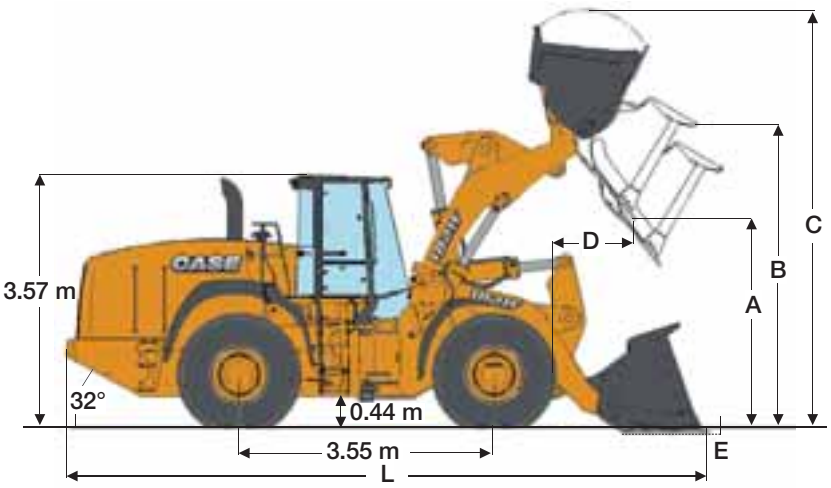

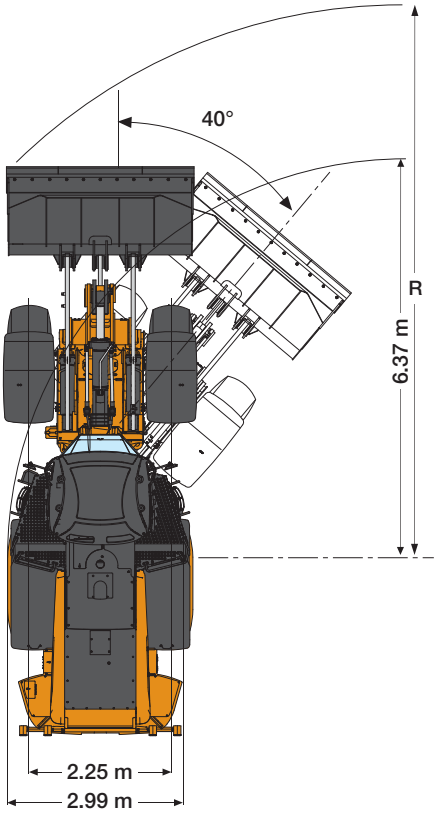

LOADER SPEED

Raising time (loaded)	6.2 sec
Dump time (loaded)	1.3 sec
Lowering time (empty, power down)	2.8 sec
Lowering time (empty, float down)	2.6 sec

1021F		Z-BAR bucket				XR bucket			
		4.4 m³		4.2 m³		4.4 m³		4.2 m³	
		edge	teeth	edge	teeth	edge	teeth	edge	teeth
Volume, heaped (SAE)	m³	4.4	4.2	4.2	4.0	4.4	4.2	4.2	4.0
Volume at 110% fill factor	m³	4.8	4.6	4.6	4.5	4.8	4.6	4.6	4.5
Bucket Payload (SAE)	ton	7.9	8.0	7.9	8.0	6.6	6.8	6.7	6.8
Maximum material density (SAE)	ton/m³	1.8	1.9	1.9	2.0	1.5	1.6	1.6	1.7
Bucket outside width	m	2.98	2.98	3.20	3.20	2.98	2.98	3.20	3.20
Bucket weight	kg	2480	2321	2286	2268	2480	2321	2286	2268
Tipping load - straight (SAE)	kg	18857	19219	19046	19193	15943	16267	16178	16298
Tipping load - Articulated at 40° (SAE)	kg	15682	16018	15876	16002	13229	13530	13454	13556
Breakout force	kg	19092	20963	20456	21922	19282	21170	17362	17401
Lift capacity from ground	kg	23000	23479	23413	23659	18497	18888	12616	12612
A - Dump height at 45° at full height	m	3.02	2.92	3.08	2.96	3.6	3.5	3.66	3.54
B - Hinge pin height	m	4.24	4.24	4.24	4.24	4.82	4.82	4.83	4.83
C - Overall height	m	5.94	5.94	5.80	5.80	6.52	6.52	6.38	6.38
D - Bucket reach at full height	m	1.33	1.45	1.27	1.4	1.34	1.46	1.28	1.41
E - Dig depth	cm	13	13	13	13	13	13	13	13
L - Overall length with bucket on the ground	m	8.98	9.13	8.89	9.07	9.50	9.65	9.41	9.59
Overall length without bucket	m	6.91	6.91	6.91	6.91	7.37	7.37	7.37	7.37
R - Turning radius to front corner of the bucket	m	7.0	7.1	7.1	7.1	7.3	7.3	7.3	7.4
Bucket rollback in carry position	°	49°	49°	49°	49°	48°	48°	48°	48°
Dump angle at full height	°	53°	53°	53°	53°	50°	50°	50°	50°
Machine operating weight with XHA2 (L3) Tyres	kg	24593	24434	24399	24381	25882	25723	25688	25670
Machine operating weight with VSDL (L5) Tyres	kg	25797	25638	25603	25585	27086	26927	26892	26874

1121F GENERAL DIMENSIONS

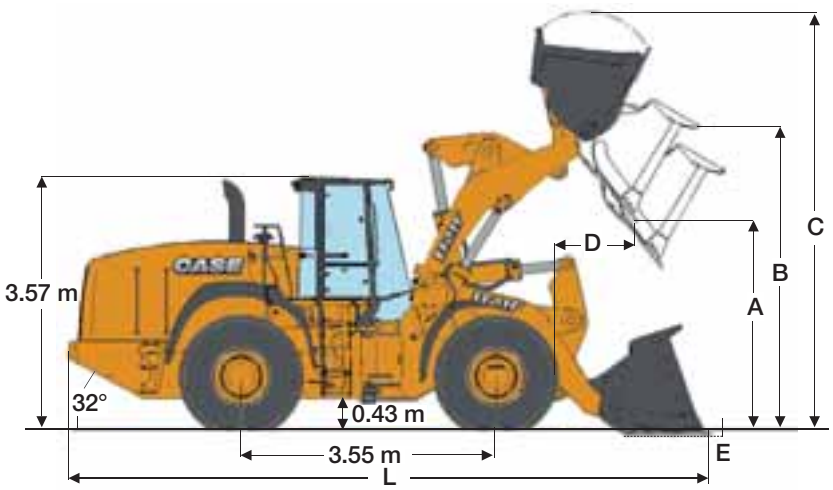

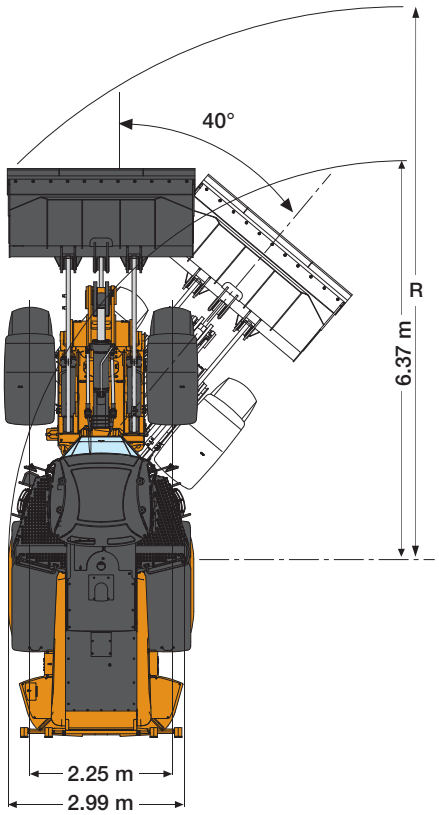

LOADER SPEED

Raising time (loaded)	6.5 sec
Dump time (loaded)	1.4 sec
Lowering time (empty, power down)	2.8 sec
Lowering time (empty, float down)	2.6 sec

1121F		Z-BAR bucket				XR bucket			
		5.0 m³		4.8 m³		5.0m³		4.8 m³	
		edge	teeth	edge	teeth	edge	teeth	edge	teeth
Volume, heaped (SAE)	m³	5.0	4.8	4.8	4.6	5.0	4.8	4.8	4.6
Volume at 110% fill factor	m³	5.5	5.3	5.3	5.1	5.4	5.3	5.3	5.1
Bucket Payload (SAE)	ton	8.7	8.9	8.9	8.9	7.6	7.8	7.8	7.8
Maximum material density (SAE)	ton/m³	1.8	1.9	1.9	1.9	1.5	1.6	1.6	1.7
Bucket outside width	m	3.18	3.18	3.20	3.20	3.18	3.18	3.20	3.20
Bucket weight	kg	2643	2469	2414	2397	2643	2469	2414	2397
Tipping load - straight (SAE)	kg	20735	21123	20949	21099	18100	18456	18319	18449
Tipping load - Articulated at 40° (SAE)	kg	17495	17857	17713	17843	15286	15620	15506	15616
Breakout force	kg	24269	24443	22661	24151	24508	24682	22883	24387
Lift capacity from ground	kg	25502	25984	25732	25970	21368	21782	21598	21783
A - Dump height at 45° at full height	m	3.09	3.09	3.20	3.09	3.51	3.51	3.62	3.5
B - Hinge pin height	m	4.44	4.44	4.44	4.44	4.86	4.86	4.86	4.86
C - Overall height	m	6.20	6.20	6.12	6.12	6.62	6.62	6.54	6.54
D - Bucket reach at full height	m	1.4	1.4	1.27	1.41	1.45	1.45	1.32	1.45
E - Dig depth	cm	12	12	12	12	12	12	12	12
L - Overall length with bucket on the ground	m	9.83	9.83	9.12	9.30	9.70	9.70	9.53	9.71
Overall length without bucket	m	7.70	7.70	7.70	7.70	8.24	8.24	8.24	8.24
R - Turning radius to front corner of the bucket	m	7.2	7.2	7.2	7.2	7.4	7.4	7.4	7.4
Bucket rollback in carry position	°	51°	51°	51°	51°	49°	49°	49°	49°
Dump angle at full height	°	50°	50°	50°	50°	50°	50°	50°	50°
Machine operating weight with XHA2 (L3) Tyres	kg	27253	27079	27024	27007	28017	27843	27788	27771
Machine operating weight with VSDL (L5) Tyres	kg	28457	28283	28228	28211	29221	29047	28992	28975

www.casece.com

EXPERTS FOR THE REAL WORLD
SINCE 1842

CASE CONSTRUCTION

Form No. AME5402CCGB - Printed in Italy - MediaCross Firenze - 10/15

CASE CONSTRUCTION EQUIPMENT
CONTACT INFORMATION

CNH INDUSTRIAL - TORINO
Via Plava 80
10135 Torino
Italy

CNH INTERNATIONAL S.A. - LUGANO
Riva Paradiso 14
6902 Paradiso - Lugano
Switzerland

CNH INDUSTRIAL - MIDDLE EAST
DAFZA – Dubai Airport Free Zone
West Wing 4 B, Office 642
P.O. Box 54588, Dubai,
United Arab Emirates

CNH INDUSTRIAL - SOUTH AFRICA
Waterfall Business Park
Bekker Street, Howick Close
1685 Midrand - Johannesburg
Republic of South Africa

NOTE: Standard and optional fittings can vary according to the demands and specific regulations of each country. The illustrations may include optional rather than standard fittings - consult your Case dealer. Furthermore, CNH Industrial reserves the right to modify machine specifications without incurring any obligation relating to such changes.

Conforms to directive 2006/42/EC